Fire and Building Safety
(FABS)

City of Elk River
13065 Orono Pkwy. NW
Elk River, MN 55330

Inspection scheduling:
763.635.1060

ERFD.FABS@ElkRiverMN.gov

City of Elk River

Fire and Building Safety Division (FABS)

SFD/MFD

Building Permit Application

Office Use Only

Notes __ Scan

Permit Total

Date _____ **Permit #**_____ **PID #**_____ **$**_____

Site Address _____ Suite/Unit ____

Subdivision _____ Lot ___ Block ___

Structure Type ☐ Single Family ☐ Townhouse ☐ Multi-family ☐ Addition ☐ Garage ☐ Outbuilding ☐ Shed

Construction Type ☐ New ☐ Addition ☐ Remodel ☐ Repair ☐ Alter. ☐ Other _____

The Applicant Is ☐ Owner ☐ Contractor ☐ Other _____

Property Owner

Name _____ Phone _____

Address _____ City _____ State ____ Zip _____

Contractor

Name _____ License/Bond _____

Address _____ City _____ State ____ Zip _____

Phone _____ Cell _____

Fax # _____ Email _____

☐ Call for credit card payment ☐ Email permit/receipt (*All permits with plans will need to be picked up*)

Describe Work _____

_____

Total Job Valuation $_____

•Separate permits are required for electrical, plumbing, heating, ventilating or air conditioning, fire sprinkler and fire alarms.

•This permit becomes null and void if work or construction authorized is not commenced within 180 days, or if construction or work is suspended or abandoned for a period of 180 days at any time after work is commenced.

•I hereby certify that I have read and examined this application and know the same to be true and correct. All provisions of laws and ordinances governing this type of work will be complied with whether specified herein or not. The granting of a permit does not presume to give authority to violate or cancel the provisions of any other state or local law regulating construction or the performance of construction..

_____

Signature of Contractor/Responsible Party Print Name Date

_____

Signature of Property Owner Print Name Date

Inspector Use Only

Permit fee _____ Plan check fee _____ State surcharge fee _____ Sewer fee _____

License fee _____ Construction type _____ Occupancy group_____ Division _____

Total SQ FT of _____ Approved to issue by _____ Called or L/M Date: _____ Int. _____

NEW RESIDENTIAL CONSTRUCTION SUBMITTAL REQUIREMENTS

- 2 Building Plans
- 2 Certificates of Survey no bigger than 11 x 17
- New Construction Energy Code Compliance Certificate
- Structure's Calculated Heat Loss and Gain
- Foundation and Floor Blocking Detail
- Exterior Foundation Insulation and Flashing Detail
- Radon Detail
- Septic Design (if septic system is required)
- Frozen Ground Erosion Control Agreement (when applicable)

ADDENDUM

Please read the following carefully

A Building Permit ***will not be issued*** until the construction site has passed an erosion control inspection.

It is the ***builder's responsibility*** to install and maintain the erosion control measures properly.

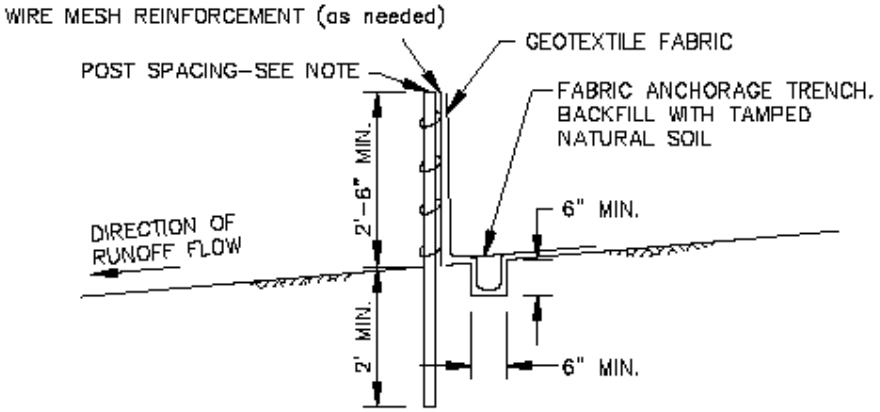

SILT FENCE DETAIL

NOTE:

1. SILT FENCES CONSTRUCTED WITH SUPPORT FENCES, POSTS SHALL BE SPACED AT 10' OR LESS, AND DRIVEN AT LEAST 2' INTO THE GROUND.
2. SILT FENCES CONSTRUCTED WITHOUT SUPPORT FENCES, POST SHALL BE SPACED AT 4' OR LESS, AND DRIVEN AT LEAST 3' INTO THE GROUND.

REV: 7/2007

City of Elk River

STANDARD SILT FENCE

STANDARD PLATE NO.

2009

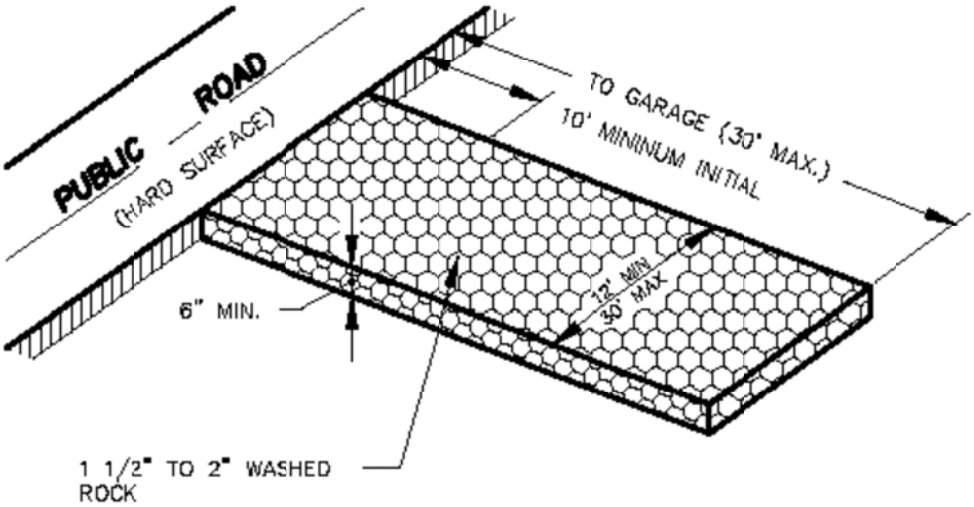

NOTE:

ROCK ENTRANCE NEEDS TO BE INPLACE (MIN 10' IN LENGTH) WITH ENOUGH MATERIAL ON HAND AT SITE TO COMPLETE TO GARAGE AFTER BACKFILL IN ORDER TO PASS INITIAL INSPECTION.

REV: 7/2007

City of Elk River

ROCK CONSTRUCTION ENTRANCE
BUILDING PERMIT

STANDARD PLATE NO.
2015

New Construction Energy Code Compliance Certificate

Per R401.3 Certificate. A building certificate shall be posted on or in the electrical distribution panel.

Date Certificate Posted	
Mailing Address of the Dwelling or Dwelling Unit	**City**
Name of Residential Contractor	**MN License Number**

THERMAL ENVELOPE

Insulation Location	Total R-Value of all Types of Insulation	Type: Check All That Apply								Other Please Describe Here
		Non or Not Applicable	Fiberglass, Blown	Fiberglass, Batts	Foam, Closed Cell	Foam Open Cell	Mineral Fiberboard	Rigid, Extruded Polystyrene	Rigid, Isocynurate	
Below Entire Slab										
Foundation Wall										
Perimeter of Slab on Grade										
Rim Joist (1st Floor)										
Rim Joist (2rd Floor+)										
Wall										
Ceiling, flat										
Ceiling, vaulted										
Bay Windows or cantilevered areas										
Floors over unconditioned area										
Describe other insulated areas										

RADON CONTROL SYSTEM

	Passive (*No Fan*)
	Active (*With fan and manometer or other system monitoring device*)
Location (or future location) of Fan:	

Building envelope air tightness (ACH):		**Duct system air tightness (cfm/100 sf):**	

Windows & Doors		**Heating or Cooling Ducts Outside Conditioned Spaces**	
Average U-Factor (*excludes skylights and one door*) U:			Not applicable, all ducts located in conditioned space
Solar Heat Gain Coefficient (SHGC):			R-value

MECHANICAL SYSTEMS

Appliances	Heating System		Domestic Water Heater		Cooling System	
Fuel Type						
Manufacturer						
Model						
Rating or Size	Input in BTUS:		Capacity in Gallons:		Output in Tons:	
Efficiency	AFUE or HSPF%				SEER /EER	

Residential Load Calculation	Heating Loss	Heating Gain	Cooling Load

Make-up Air *Select a Type*

	Not required per mech. code
	Passive
	Powered
	Interlocked with exhaust device. Describe:
	Other, describe:
Location of duct or system:	
	Cfm's
	" round duct OR
	" metal duct

MECHANICAL VENTILATION SYSTEM

Describe any additional or combined heating or cooling systems if installed: (e.g. two furnaces or air source heat pump with gas back-up furnace):

Select Type

	Heat Recover Ventilator (HRV) Capacity in cfms:	Low:		High:	
	Energy Recover Ventilator (ERV) Capacity in cfms:	Low:		High:	
	Balanced Ventilation capacity in cfms:				
	Location of fan(s), describe:				
	Capacity continuous ventilation rate in cfms:				
	Total ventilation (intermittent + continuous) rate in cfms:				

Combustion Air *Select a Type*

	Not required per mech. code
	Passive
	Other, describe:
Location of duct or system:	
	Cfm's
	" round duct OR
	" metal duct

Builders Associaton of Minnesota version 101014